ESP32 with USB TYPE-C

+5V TO +3V3

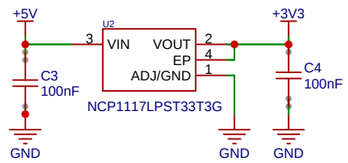

POWER LED

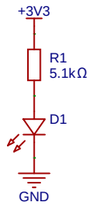

USER LED

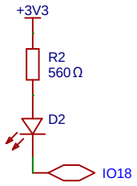

POWER INPUT SELECTION

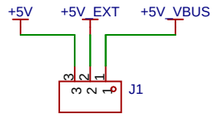

ESP32 MODULE

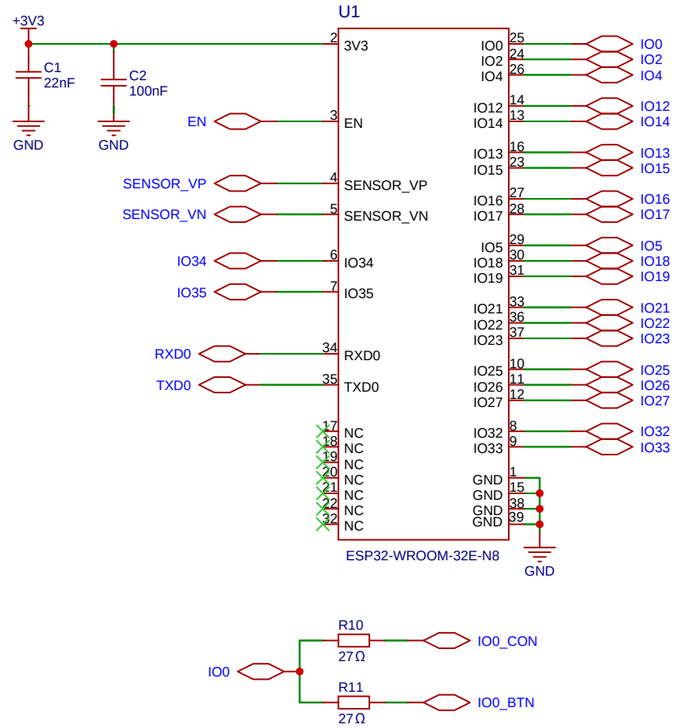

USB TYPE-C CONNECTOR

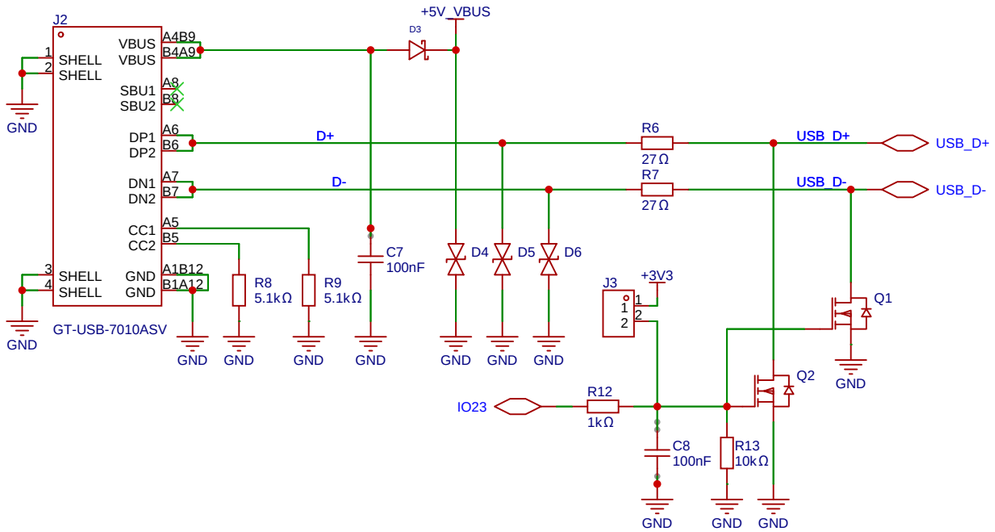

USB TO UART

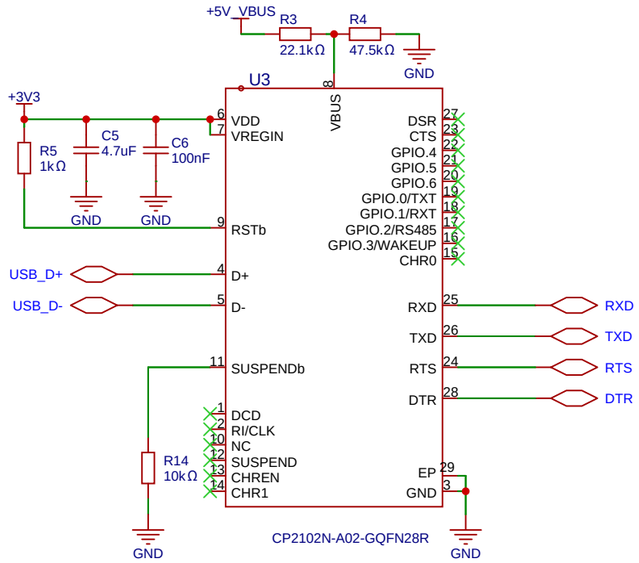

CONNECTORS

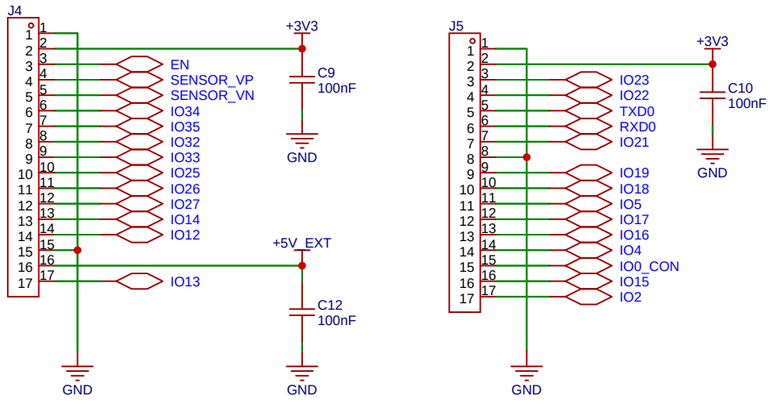

RESET BUTTON

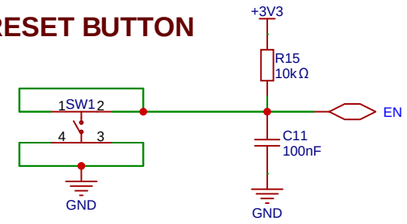

BOOT/USER BUTTON

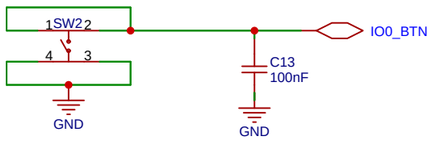

SERIAL SIGNAL HANDLING

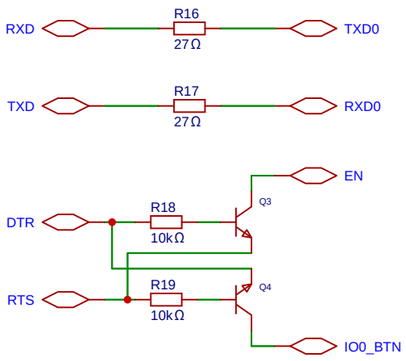

REF : https://dl.espressif.com/dl/schematics/esp32_devkitc_v4-sch.pdf

Schematic	Schematic1	Update Date	2026-05-12
		Create Date	
Page	ESP32	Part Number	BOPCB-005
Drawn	ESP32 work lab 2		
Reviewed			
		VER	SIZE
		V0.1	A3

PAGE OF

EasyEDA

Lornah